DBI664IXXLS.U

Built-in undercounter dishwasher

General description

Turbo Drying
Product line: Style
Mode of installation: Built In
Size: XXL
Number of baskets: 3
Number of place settings: 16 place settings
Top tray: Easy height adjustment; With rack for knives and utensils; With rack for bowls and cups; With telescopic rails; Handle; Removable
Upper basket type: Premium
Lower basket type: Premium
Removable cutlery basket for easy unloading

ENERGY GUIDE
Click for this product's energy information.

Construction

- Welded stainless steel container
- Exterior float - detects water leakage on the base
- Stand by water protection
- Anti-block drain pump
- 8 Steel™ Construction
- Hidden heater
- SCS+ - Super Cleaning System+™
- Sensi Clean™ Sensor - measures dirtiness level
- Number of spray arms: 3
- Jet Spray™ - Extra dishwashing power for bottles
- Wide Spray™ - A spray zone for pots and pans
- Cutlery Power Zone - extra dishwashing power for the cutlery basket

Use and flexibility

- Number of place settings: 16 place settings
- Number of baskets: 3
- Top tray: Easy height adjustment; With rack for knives and utensils; With rack for bowls and cups; With telescopic rails; Handle; Removable
- Upper basket type: Premium
- Upper basket system: Easy height adjustable with lever
- Guide rails with ball bearings for upper basket
- Lower basket type: Premium
- Tight mesh base in the baskets
- Removable cutlery basket for easy unloading
- 2 interior LED lights
- Required inlet water pressure: 0,03-1 MPa

Interaction & control

- Display Type: LCD display
- Ability to create own programs: Memory program
- Number of programs: 12
- Number of options: 7
- Status Light™
- Time remaining indicator: Yes
- Cycle end indication: Displayed with sound and light

Programs

- Delayed start: 1-24 hours
- Green mode
- Speed mode
- Night mode
- Intensive mode
- Extra Dry
- Normal mode

Design & integration

- From front adjustable rear foot
- Trim kit
- Multi fit outlet hose
- Simplified installation with integrated anti-siphon

ASKO
Inspired by Scandinavia

- Depth (incl. wall spacing): 22 5/8” (575 mm)
- Height setting: 1 15/16” (50 mm)
- Possible adjustment of kick plate: 1 3/16 - 3 10/16" (30-94 mm)

Safety & Maintenance

- Aqua Safe™
- Kid Safe™ - lockable controls
- Rinse-aid indication: Notification in display

Technical data

- Hot or cold water connection - 9/16
- Max. temperature of inflow water: 140 F
- Noise level: 40 dB(A)
- Estimated annual energy consumption: 235 kWh
- Energy consumption/cycle: 1 kWh
- Estimated annual water consumption: 687 US Gal
- Water consumption/cycle: 3 US Gal
- Consumption in off mode: 0.49 W
- Consumption in standby mode: 0.49 W
- Connection rating: 1300 W
- Number of phases: 1
- Current: 15 A
- Frequency: 60 Hz
- Required inlet water pressure: 0,03-1 MPa
- Net weight: 96 lbs

Dimensions

- Width: 24” (609 mm)
- Height: 34 5/16” (871 mm)
- Depth: 22 5/8” (574 mm)
- Maximum product height: 36 1/4” (921 mm)
- Cord length: 47 1/4” (1200 mm)
- Depth with door open: 49 5/16” (1253 mm)
- Length of inflow hose: 64 3/16” (1630 mm)
- Length of outflow hose: 90 9/16” (2300 mm)

Logistic information

- Packaging width: 25 3/16” (640 mm)
- Packaging height: 36 5/8” (930 mm)
- Packaging depth: 26 3/4” (680 mm)
- Total weight of packaged product: 104 lbs
- Code: 737065
- EAN code: 3838782508967
- Market: Domestic
- Range: Style

Measurements: inches / millimetres

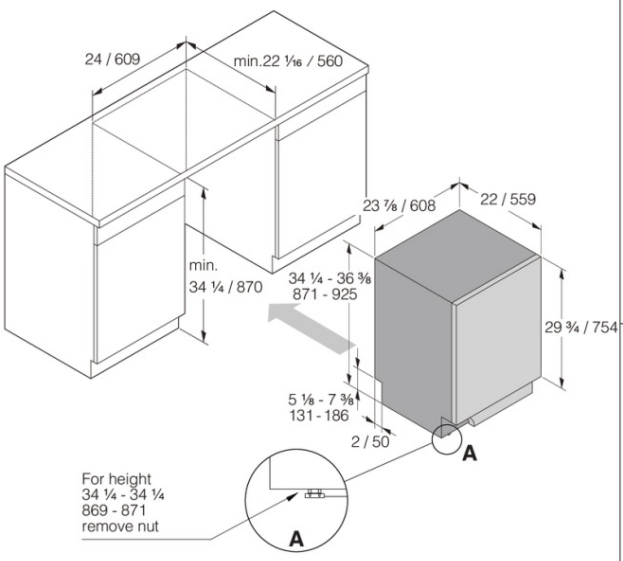

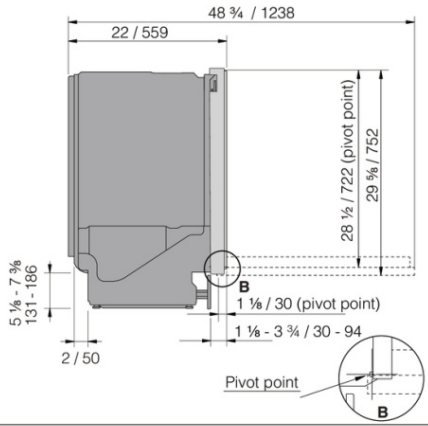

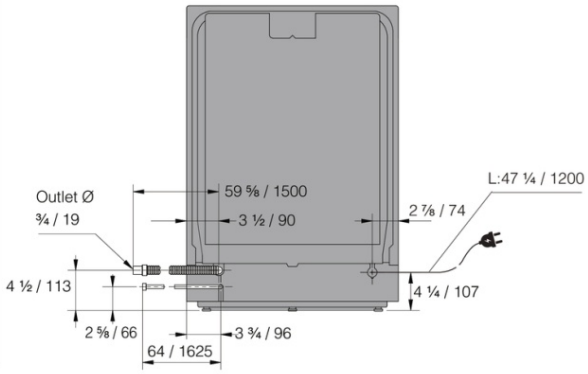

DW40 Built-in dishwasher XXL USA

ASKO
Inspired by Scandinavia