OP8664S

60cm Craft Pyrolytic Oven

Installation type: Built-in
Range: Craft
Available colour: Stainless Steel
Product dimensions (HxWxD): 59,5 × 59,7 × 54,7 cm
5 Air Flow System, Oven volume - 71 L, Pyrolytic Self Clean, Auto Roast, Defrost, Eco

5 Air Flow System | **Oven volume - 71 L** | **Pyrolytic Self Clean** | **Auto Roast** | **Defrost** | **Eco**

Construction & Performance

- Maximum oven temperature: 275 °C
- Meat probe

Use & Flexibility

- Oven lighting: Both sides
- Oven useful volume (old energy label): 71 l
- OpenView
- Fully extendible guides
- 1x wire guides
- One level pullout fully extendable guiderails
- Grid
- 1 deep tray
- 2 shallow trays

Interaction & Control

- Knob shape: Ergonomical dials
- Small TFT

Programs, options and modes

- Lower heater BIO
- Upper Heater
- Lower and upper heater
- Small infra heater
- Large Infra Heater
- Large infra heater with ventilation
- Circular heater
- Eco-function
- Lower heater and fan
- Lower heater with fan BIO
- Defrost cooker
- WarmPlate
- StayWarm function
- Fast Preheat
- Auto roast function

Standard accessories

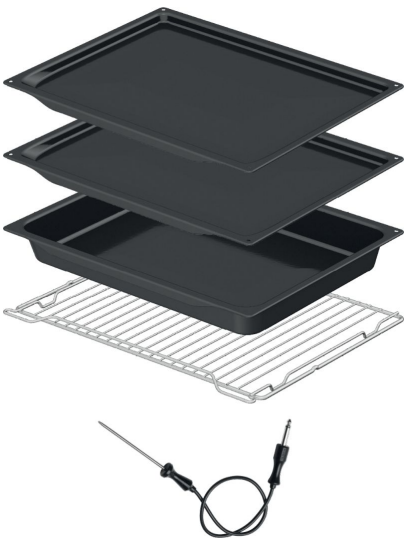

Design & Integration

- Door material: Stainless steel and glass
- Available colour: Stainless Steel
- Touch Free Inox
- Niche dimensions (HxWxD): 59 × 56 × 55 cm

Safety & Maintenance

- Dynamic oven cooling plus - DC+
- GentleClose door hinge
- Removable flat oven inner door glass surface
- Pyrolytic cleaning
- Pyroproof side racks

Technical data

- Consumption in standby mode: 1 W
- Energy class: A+
- Oven consumption (conventional operation): 1 kWh

ASKO Appliances Pty Ltd - 35 Sunmore Close - MOORABBIN VIC 3189
Phone: 1300 00 2756 - Fax: 03 8551 2220
Email Address: sales@asko.com.au - https://au.asko.com/

ASKO
Inspired by Scandinavia

- Oven consumption (venting operation): 0,69 kWh
- Energy consumption conventional oven (old energy label): 0,94 kWh
- Energy consumption forced air assisted oven (old energy label): 0,9 kWh
- Connection rating: 3400 W
- Frequency: 50 Hz

Dimensions

- Product dimensions (HxWxD): 59,5 × 59,7 × 54,7 cm
- Net weight: 41,3 kg

Logistic information

- Dimensions of packed product (HxWxD): 70 × 66 × 70 cm
- Gross weight: 46,5 kg
- Product code: 729829
- EAN code: 3838782081910
- Range: Craft

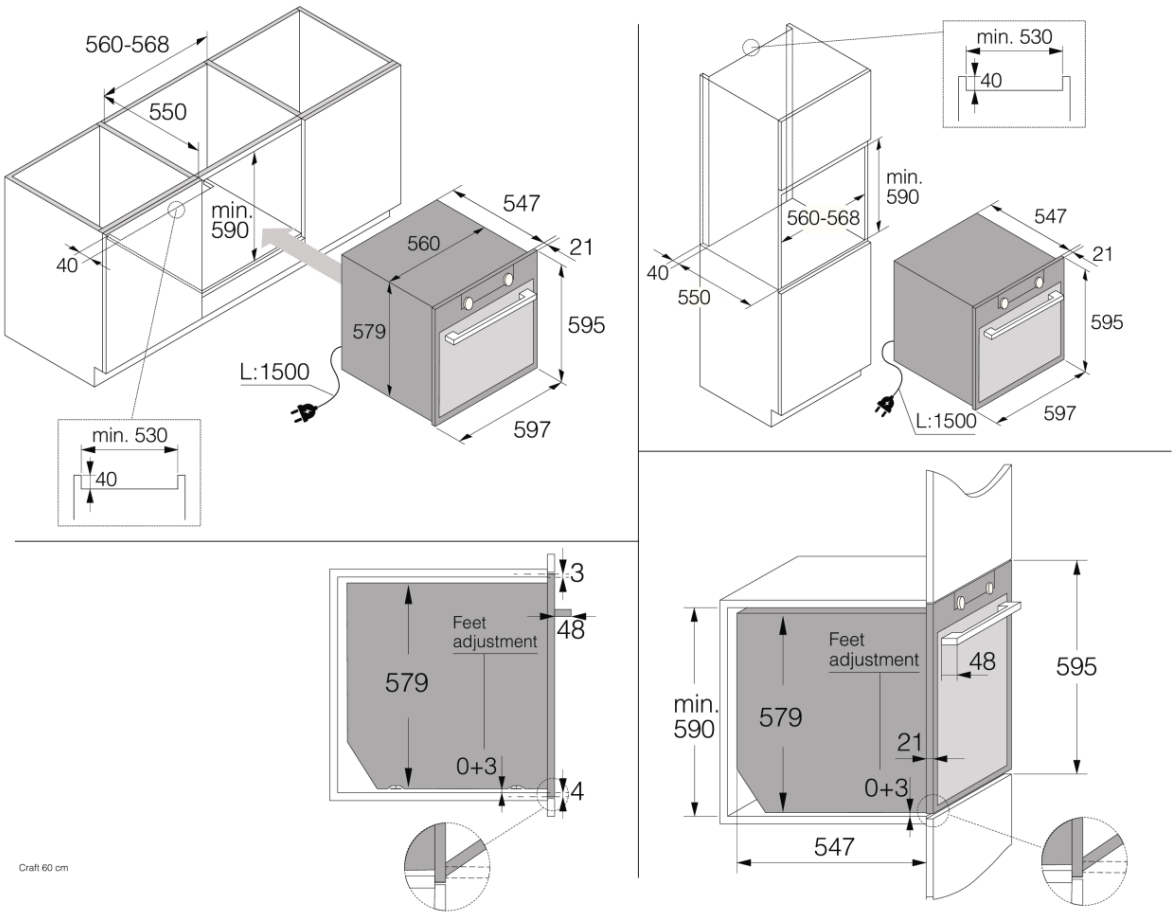

ASKO Appliances Pty Ltd - 35 Sunmore Close - MOORABBIN VIC 3189
Phone: 1300 00 2756 - Fax: 03 8551 2220
Email Address: sales@asko.com.au - https://au.asko.com/

ASKO
Inspired by Scandinavia