T411VD.T.U

Vented dryer

General description

T411VD.T.U
Product line: Logic
Mode of installation: Freestanding
Number of programs: 13
Type of dryer: Vented dryer
Display Type: LCD display
Anti crease
Color: Metallic grey

Construction

- Long lasting stainless steel drum
- Brushless (induction)
- Energy-saving electric heater
- Drying Sensor
- Heater capacity (W): 3000 W
- Butterfly drying system

Use and flexibility

- Auto programs
- Removable filter
- Door diameter: 13 3/8” (340 mm)
- Door opening angle: 180 °
- Anti crease
- Time setting
- Humidity sensor
- Drum illumination: Yes

Interaction & control

- Remaining time indicator
- Display Type: LCD display
- End of Program Signal
- Program memory

Programs

- 13
- Auto dry
- Auto iron dry
- Auto terry
- Auto jeans
- Auto normal dry
- Auto down
- Auto synthetics
- Time program
- Airing
- Bedding
- Shirts
- Quick pro

Design & integration

- Door opening: Reversible door opening
- Adjustable feet: 9/16” (15 mm)
- Dryer can be mounted on top of washer
- Loading position: Front

Safety & Maintenance

- Lockable control panel
- Overheat protection
- Thermal and electonic protection against overheating

Technical data

- Heater capacity (W): 3000 W
- Noise level: 65 dB(A)
- Power consumption in standby mode: 0.3 W
- Power consumption in off-mode: 0.3 W
- Estimated annual energy consumption: 630 kWh

ASKO
Inspired by Scandinavia

- Grounded plug
- Connecting cord with plug
- Connection rating: 7000 W
- Number of phases: 1
- Current: 30 A
- Frequency: 60 Hz
- Net weight: 102 lbs
- Marked for recycling
- ISO 14001

Dimensions

- Product dimensions (HxWxD): 33 7/16” × 23 7/16” × 30 1/4” (850 × 595 × 769 mm)
- Depth with door open: 51 3/8” (1305 mm)
- Cord length: 66 15/16” (1700 mm)
- Left + right + back

Logistic information

- Packaging dimensions: 36 1/4” × 25 3/16” × 33” (920 × 640 × 838 mm)
- Total weight of packaged product: 112 lbs
- Code: 591236
- EAN code: 3838782022418

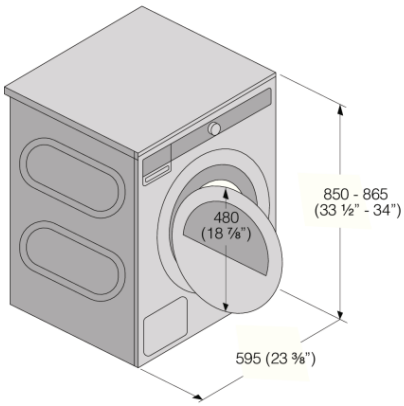

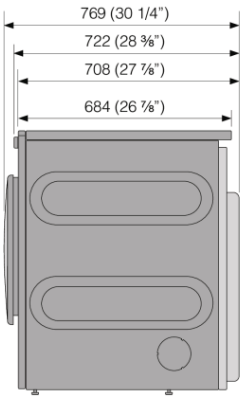

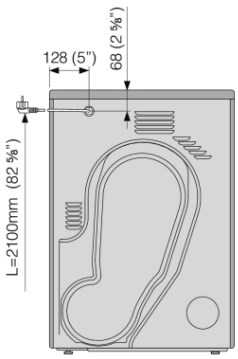

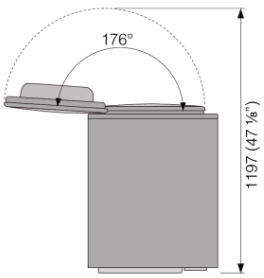

Tumble Dryer/TD-85/USA

ASKO
Inspired by Scandinavia